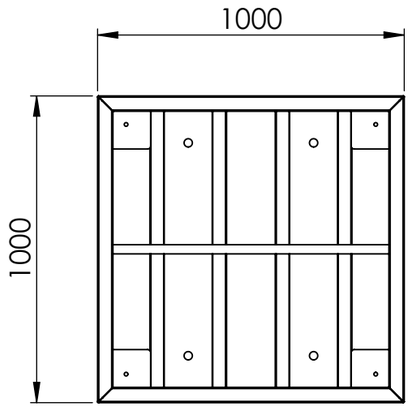

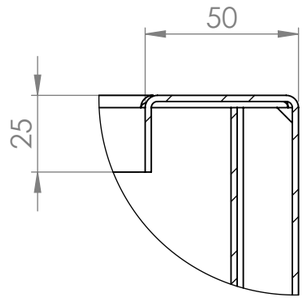

DETAIL A
SCALE 1 : 2

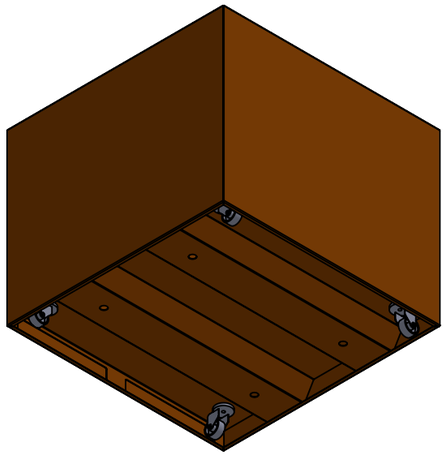

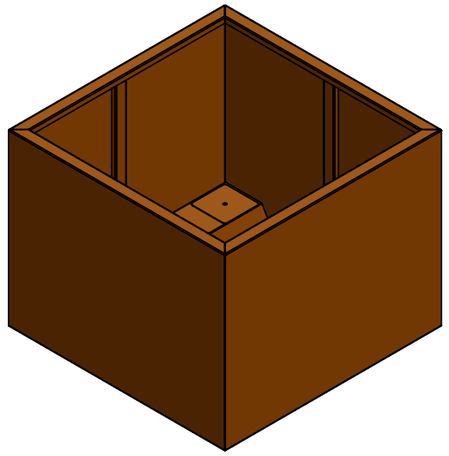

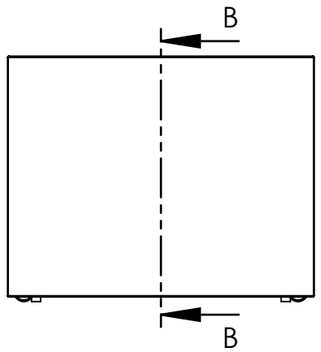

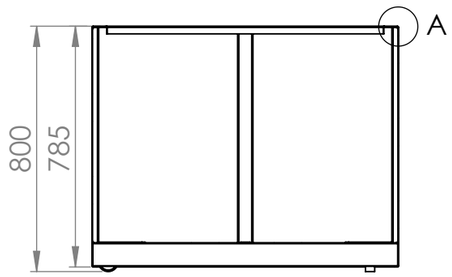

SECTION B-B

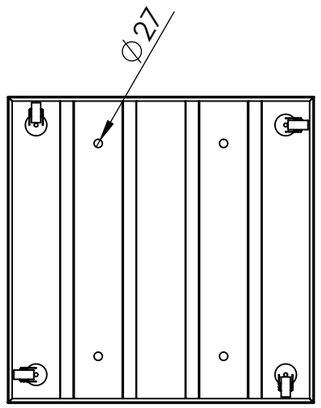

		DATE
DRAWN	Benny Dijkhuis	8-11-2019
REVISION	Luuk van der Heuvel	9-12-2020

ADEZZ®
WE PRODUCE GARDEN PRODUCTS FOR PROFESSIONALS

Liessentstraat 4, 5405 AG Uden (NL).
t 0031 (0)413 - 27 41 68.
e info@adezz.com, i www.adezz.com

TITLE:
2mm Corten

Drawing.
CAWL 5.1

A3

Color:

Mass (kg): **78.40**

SCALE:1:20

SHEET 1 OF 7